Black Bear

WINDMILL HOIST

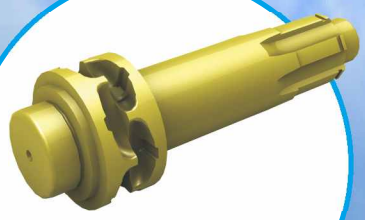

- 10 pocket and 45 degrees lift wheel for chain smooth operation.

CHENG DAY MACHINERY WORKS CO., LTD

※Chain bucket is different from the actual size, the photo reference is for schematic purposes only.

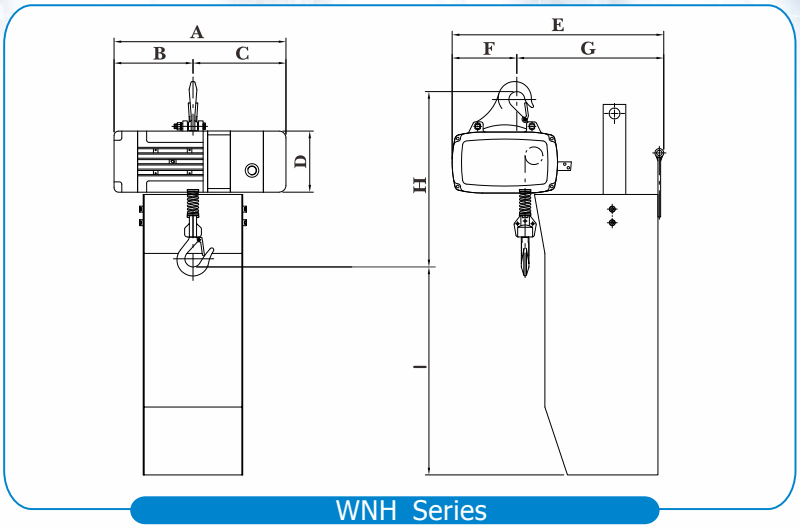

WNH Series

Model	S.W.L. (kg)	Lift (m)	Dimension (mm)									Load Chain	Hoisting				E.D. Rating (%)	Load Chain Fall No.	N.W. / G.W. (kg)
			A	B	C	D	E	F	G	H	I	Dia X pitch (mm)	Speed (m/min)		Motor Power (kw) (Pole)				
													50Hz	60Hz	50Hz	60Hz			
WNH-012	125	80	380	175	205	135	472	143	329	376	460	ϕ 4.0 x12.0	20	20	0.6x2P	0.6x2P	40	1	58/60
WNH-025	250	80	468	221	247	156	534	186	353	485	701	ϕ 6.3 x19.1	20	20	1.6x2P	1.6x2P	40	1	111/113
WNH-050	500	80	488	240	248	170	554	188	366	520	710	ϕ 7.1 x20.2	20	20	2.5x2P	2.5x2P	40	1	145/148
WNH-100	1000	80	488	240	248	170	624	188	436	520	750	ϕ 8.0 x24.0	10	10	2.5x2P	2.5x2P	40	1	145/148

※Operates on single voltage between 220V~600V, 3 ph

※24V or 110V control voltage for operator safety.

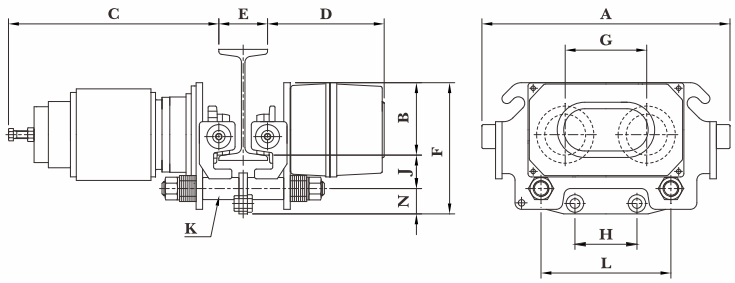

Motorized WNT Trolley

Model	Dimension (mm)												Speed (m/min)		Motor Power (kw) (Pole)	N.W. (kg)	Min radius of carve (m)
	A	B	C	D	E	F	G	H	L	J	N	K	50Hz	60Hz			
WNT-012	382	124.5	324	180	75-125	217	125.5	120	200	51.5	41	7/8"-9UNC (ϕ 22.2)	20	24	0.12x2P	45	1.3
WNT-025	382	124.5	324	180	75-125	217	125.5	95.5	200	51.5	41	7/8"-9UNC (ϕ 22.2)	20	24	0.12x2P	45	1.3
WNT-050	382	124.5	324	180	75-125	217	125.5	120	200	51.5	41	7/8"-9UNC (ϕ 22.2)	20	24	0.18x2P	45	1.3
WNT-100	382	124.5	324	180	75-125	217	125.5	120	200	51.5	41	7/8"-9UNC (ϕ 22.2)	20	24	0.18x2P	45	1.3

※Different flange with options available on request. Maximun:300mm

Black Bear

CHENG DAY MACHINERY WORKS CO., LTD.

No. 173, Wen Chiu Rd., Dajia Dist., Taichung City 437, Taiwan

Tel: +886-4-2688-1581 Fax: +886-4-2688-1509

Website: www.chengday.com.tw E-mail: info@chengday.com.tw

- Revision of Septembr, 2012 (Edition No.4) #950199
- No further notice while sizes and dimensions update ; Quotations are based on practical dimensions.
- Due to the printing factors, the color of the products is subject to minor deviation from the physical objects.